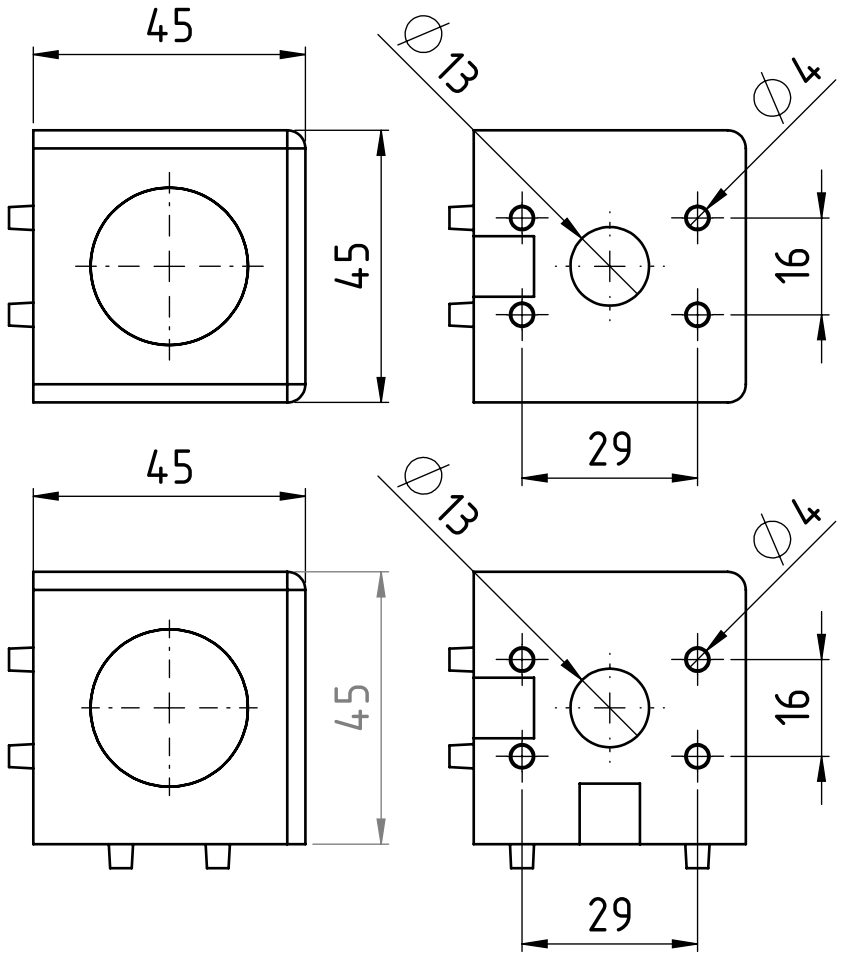
45
45
∅13
∅4
16
29
45
45
∅13
∅4
16
29